MITSUBISHI ELECTRIC

<IGBT Modules>

CM800DX-24T1/CM800DXP-24T1

HIGH POWER SWITCHING USE
INSULATED TYPE

DX		Collector current I_C ..... **800** A Collector-emitter voltage V_{CES} ..... **1200** V Maximum junction temperature T_{vjmax} ..... **175** °C ●Flat base type ●Copper base plate (Nickel-plating) ●RoHS Directive compliant ●Tin-plating pin terminals
DXP		Collector current I_C ..... **800** A Collector-emitter voltage V_{CES} ..... **1200** V Maximum junction temperature T_{vjmax} ..... **175** °C ●Flat base type ●Copper base plate (Nickel-plating) ●RoHS Directive compliant ●Tin-plating pressfit terminals
dual switch (half-bridge)		●UL Recognized under UL 1557, File No.E323585

APPLICATION

AC Motor Control, Motion/Servo Control, Power supply, etc.

OPTION (Below options are available.)

- ●PC-TIM (Phase Change Thermal Interface Material) pre-apply
- ●V_{CEsat} selection for parallel connection

INTERNAL CONNECTION

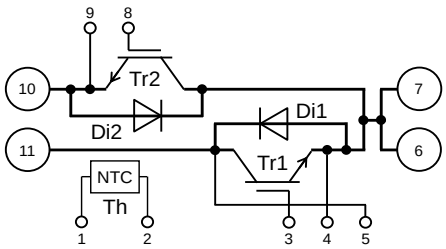

TERMINAL CODE

1. TH1	6. C2E1
2. TH2	7. C2E1
3. G1	8. G2
4. Es1	9. Es2
5. Cs1	10. E2
	11. C1

OUTLINE DRAWING

Dimension in mm

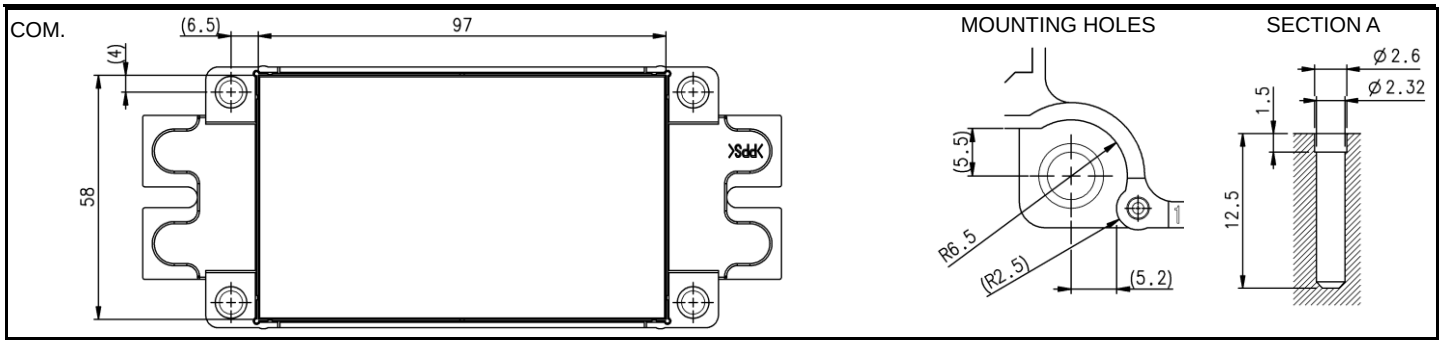

CM800DX-24T1/CM800DXP-24T1

HIGH POWER SWITCHING USE
INSULATED TYPE

OUTLINE DRAWING **Dimension in mm**

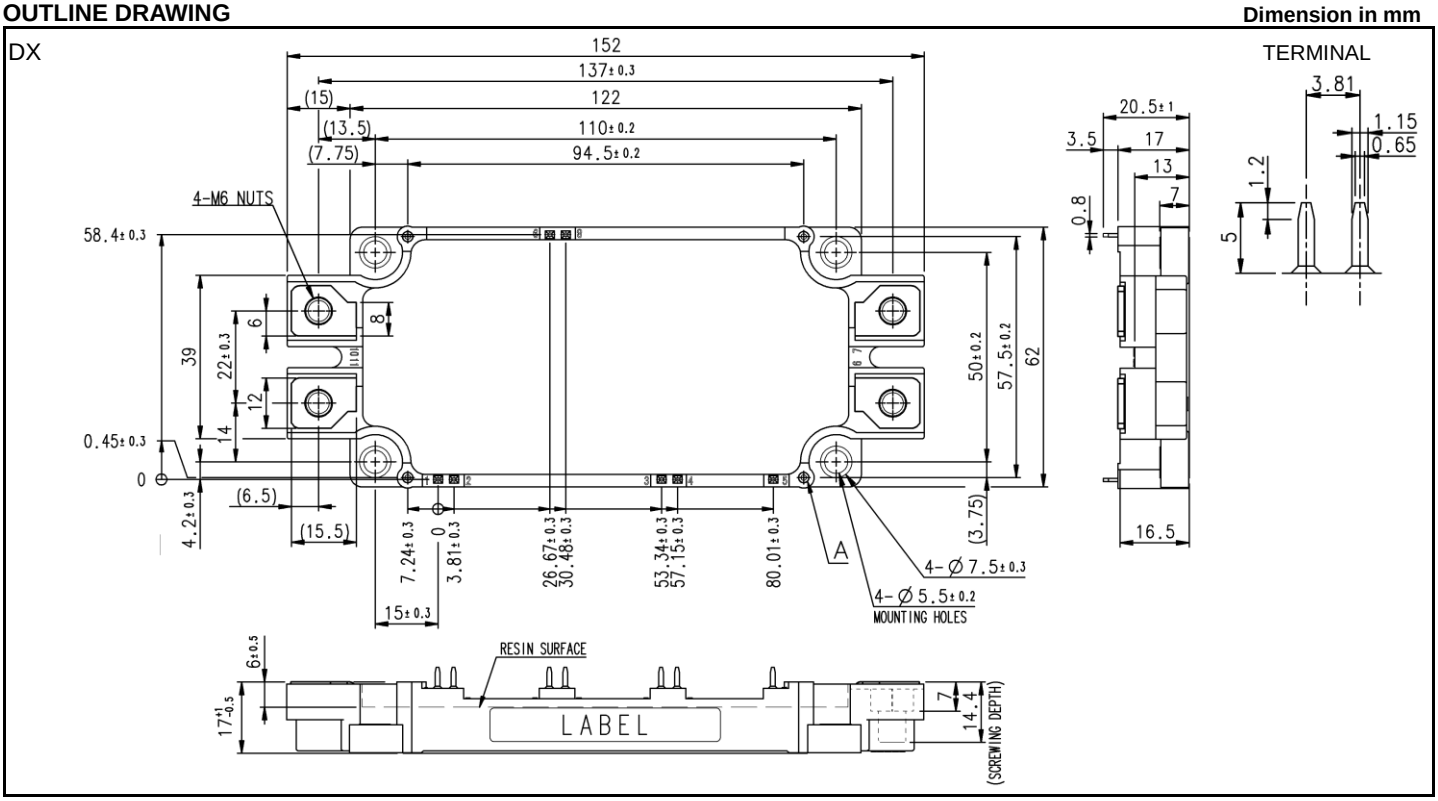

Tolerance otherwise specified

Division of Dimension		Tolerance
0.5	to 3	±0.2
over 3	to 6	±0.3
over 6	to 30	±0.5
over 30	to 120	±0.8
over 120	to 400	±1.2

CM800DX-24T1/CM800DXP-24T1

HIGH POWER SWITCHING USE
INSULATED TYPE

OUTLINE DRAWING **Dimension in mm**

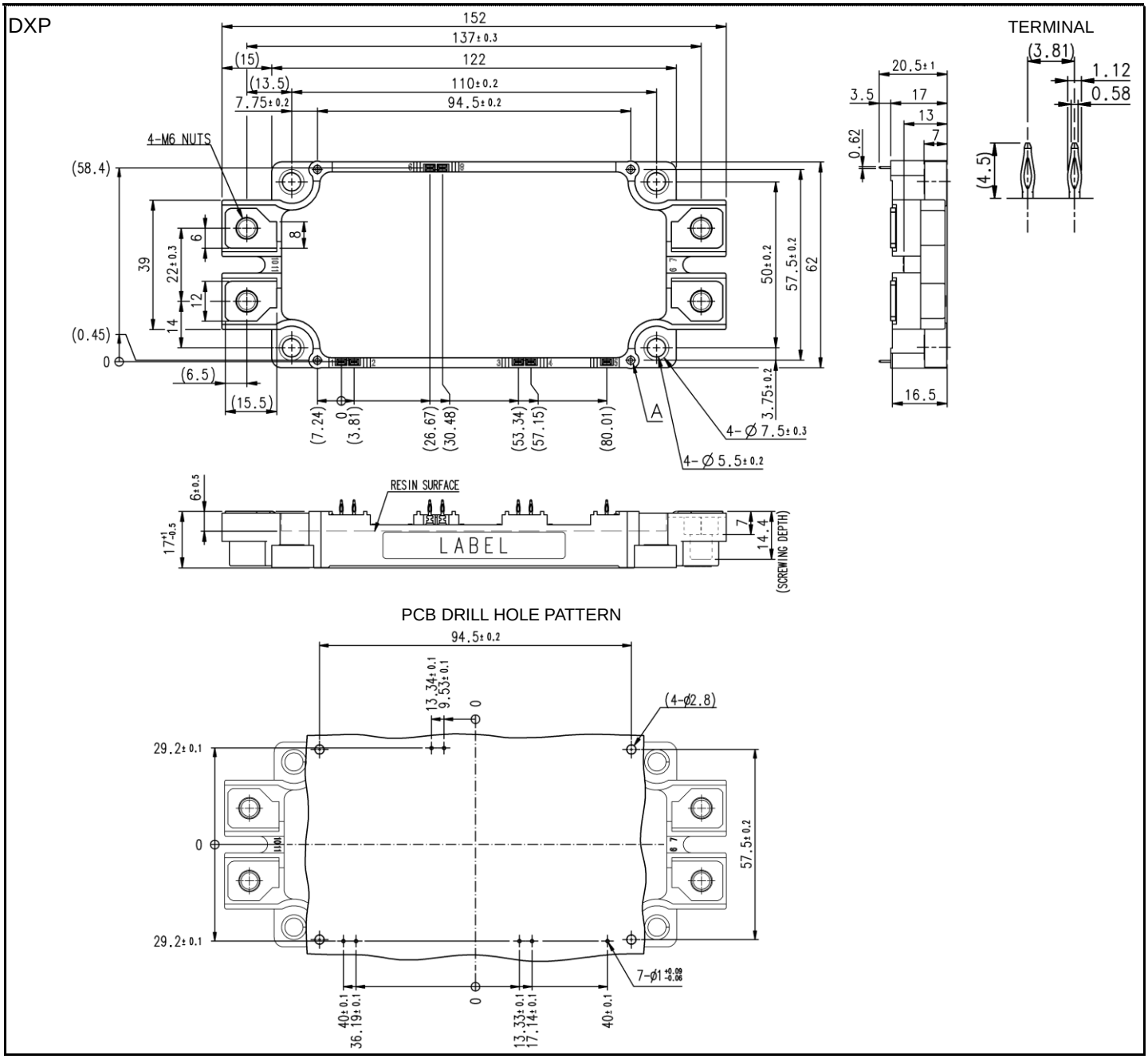

Tolerance otherwise specified

Division of Dimension		Tolerance
0.5	to 3	±0.2
over 3	to 6	±0.3
over 6	to 30	±0.5
over 30	to 120	±0.8
over 120	to 400	±1.2

MAXIMUM RATINGS (T_{vj}=25 °C, unless otherwise specified)

INVERTER PART IGBT/FWD

Symbol	Item	Conditions	Rating	Unit
V_{CES}	Collector-emitter voltage	G-E short-circuited	1200	V
V_{GES}	Gate-emitter voltage	C-E short-circuited	± 20	V
I_C	Collector current	DC, T_C=90 °C (Note2, 4)	800	A
I_{CRM}		Pulse, Repetitive (Note3)	1600	
P_{tot}	Total power dissipation	T_C=25 °C (Note2, 4)	3485	W
I_E (Note1)	Emitter current	DC (Note2)	800	A
I_{ERM} (Note1)		Pulse, Repetitive (Note3)	1600	

MODULE

Symbol	Item	Conditions	Rating	Unit
V_{isol}	Isolation voltage	Terminals to base plate, RMS, f=60 Hz, AC 1 min	2500	V
T_{vjmax}	Maximum junction temperature	Instantaneous event (overload)	175	°C
T_{Cmax}	Maximum case temperature	(Note4)	125	
T_{vjop}	Operating junction temperature	Continuous operation (under switching)	-40 ~ +150	°C
T_{stg}	Storage temperature	-	-40 ~ +125	

ELECTRICAL CHARACTERISTICS (T_{vj}=25 °C, unless otherwise specified)

INVERTER PART IGBT/FWD

Symbol	Item	Conditions		Limits Min.	Limits Typ.	Limits Max.	Unit
I_{CES}	Collector-emitter cut-off current	V_{CE}=V_{CES}, G-E short-circuited		-	-	1.0	mA
I_{GES}	Gate-emitter leakage current	V_{GE}=V_{GES}, C-E short-circuited		-	-	0.5	μA
$V_{GE(th)}$	Gate-emitter threshold voltage	I_C=80 mA, V_{CE}=10 V		5.4	6.0	6.6	V
V_{CEsat} (Terminal)	Collector-emitter saturation voltage	I_C=800 A, V_{GE}=15 V, Refer to the figure of test circuit (Note5)	T_{vj}=25 °C	-	1.90	2.30	V
			T_{vj}=125 °C	-	2.15	-	
			T_{vj}=150 °C	-	2.25	-	
V_{CEsat} (Chip)		I_C=800 A, V_{GE}=15 V, (Note5)	T_{vj}=25 °C	-	1.70	2.00	V
			T_{vj}=125 °C	-	1.95	-	
			T_{vj}=150 °C	-	2.05	-	
C_{ies}	Input capacitance	V_{CE}=10 V, G-E short-circuited		-	-	145.5	nF
C_{oes}	Output capacitance			-	-	4.1	
C_{res}	Reverse transfer capacitance			-	-	1.8	
Q_G	Gate charge	V_{CC}=600 V, I_C=800 A, V_{GE}=15 V		-	4.5	-	μC
$t_{d(on)}$	Turn-on delay time	V_{CC}=600 V, I_C=800 A, V_{GE}=±15 V, R_G=1.0 Ω, Inductive load		-	-	600	ns
t_r	Rise time			-	-	300	
$t_{d(off)}$	Turn-off delay time			-	-	800	
t_f	Fall time			-	-	400	
V_{EC} (Note1) (Terminal)	Emitter-collector voltage	I_E=800 A, G-E short-circuited, Refer to the figure of test circuit (Note5)	T_{vj}=25 °C	-	1.95	2.35	V
			T_{vj}=125 °C	-	2.00	-	
			T_{vj}=150 °C	-	2.05	-	
V_{EC} (Note1) (Chip)		I_E=800 A, G-E short-circuited, (Note5)	T_{vj}=25 °C	-	1.75	2.10	V
			T_{vj}=125 °C	-	1.80	-	
			T_{vj}=150 °C	-	1.80	-	
t_{rr} (Note1)	Reverse recovery time	V_{CC}=600 V, I_E=800 A, V_{GE}=±15 V, R_G=1.0 Ω, Inductive load		-	-	500	ns
Q_{rr} (Note1)	Reverse recovery charge			-	80	-	μC
E_{on}	Turn-on switching energy per pulse	V_{CC}=600 V, I_C=I_E=800 A, V_{GE}=±15 V, R_G=1.0 Ω, T_{vj}=150 °C, Inductive load		-	80.0	-	mJ
E_{off}	Turn-off switching energy per pulse			-	84.0	-	
E_{rr} (Note1)	Reverse recovery energy per pulse			-	51.0	-	mJ
$R_{CC'+EE'}$	Internal lead resistance	Main terminals-chip, per switch, T_C=25 °C (Note4)		-	0.71	-	mΩ
r_g	Internal gate resistance	Per switch		-	0.67	-	Ω

ELECTRICAL CHARACTERISTICS (cont.; T_{vj}=25 °C, unless otherwise specified)

NTC THERMISTOR PART

Symbol	Item	Conditions	Limits			Unit
			Min.	Typ.	Max.	
R_{25}	Zero-power resistance	T_C=25 °C (Note4)	4.85	5.00	5.15	kΩ
ΔR/R	Deviation of resistance	R_{100}=493 Ω, T_C=100 °C (Note4)	-7.3	-	+7.8	%
$B_{(25/50)}$	B-constant	Approximate by equation (Note6)	-	3375	-	K
P_{25}	Power dissipation	T_C=25 °C (Note4)	-	-	10	mW

THERMAL RESISTANCE CHARACTERISTICS

Symbol	Item	Conditions		Limits			Unit
				Min.	Typ.	Max.	
$R_{th(j-c)Q}$	Thermal resistance	Junction to case, per Inverter IGBT (Note4)		-	-	43	K/kW
$R_{th(j-c)D}$		Junction to case, per Inverter FWD (Note4)		-	-	60	
$R_{th(c-s)}$	Contact thermal resistance	Case to heat sink, per 1 module,	Thermal grease applied (Note4, 7)	-	11.5	-	K/kW
			PC-TIM applied (Note4, 8)	-	3.1	-	

MECHANICAL CHARACTERISTICS

Symbol	Item	Conditions		Limits			Unit
				Min.	Typ.	Max.	
M_t	Mounting torque	Main terminals	M 6 screw	3.5	4.0	4.5	N·m
M_s	Mounting torque	Mounting to heat sink	M 5 screw	2.5	3.0	3.5	N·m
d_s	Creepage distance	Solder pin type (DX)	Terminal to terminal	17	-	-	mm
			Terminal to base plate	16.4	-	-	
		Pressfit pin type (DXP)	Terminal to terminal	17	-	-	mm
			Terminal to base plate	16.8	-	-	
d_a	Clearance	Solder pin type (DX)	Terminal to terminal	10	-	-	mm
			Terminal to base plate	16.2	-	-	
		Pressfit pin type (DXP)	Terminal to terminal	10	-	-	mm
			Terminal to base plate	16.2	-	-	
e_c	Flatness of base plate	On the centerline X, Y (Note9)		±0	-	+200	μm
m	mass	-		-	300	-	g

*: This product is compliant with the Restriction of the Use of Certain Hazardous Substances in Electrical and Electronic Equipment (RoHS) directive 2011/65/EU.

Note1. Represent ratings and characteristics of the anti-parallel, emitter-collector free-wheeling diode (FWD).

2. Junction temperature (T_{vj}) should not increase beyond T_{vjmax} rating.
3. Pulse width and repetition rate should be such that the device junction temperature (T_{vj}) dose not exceed T_{vjmax} rating.
4. Case temperature (T_C) and heat sink temperature (T_S) are defined on the each surface (mounting side) of base plate and heat sink just under the chips. Refer to the figure of chip location.
5. Pulse width and repetition rate should be such as to cause negligible temperature rise. Refer to the figure of test circuit.
6. $B_{(25/50)} = \ln(\frac{R_{25}}{R_{50}})/(\frac{1}{T_{25}} - \frac{1}{T_{50}})$

   R_{25}: resistance at absolute temperature T_{25} [K]; T_{25}=25 [°C]+273.15=298.15 [K]

   R_{50}: resistance at absolute temperature T_{50} [K]; T_{50}=50 [°C]+273.15=323.15 [K]
7. Typical value is measured by using thermally conductive grease of λ=0.9 W/(m·K)/$D_{(C-S)}$=50 μm.
8. Typical value is measured by using PC-TIM of λ=3.4 W/(m·K)/$D_{(C-S)}$=50 μm.
9. The base plate (mounting side) flatness measurement points (X, Y) are shown in the following figure.

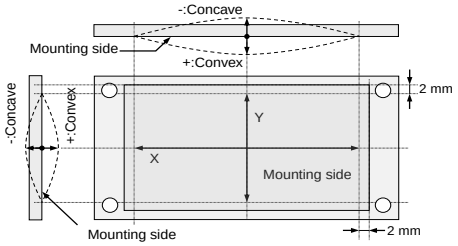

Note10. Use the following screws when mounting the printed circuit board (PCB) on the standoffs.
PCB thickness : t=1.6

Type	Manufacturer	Size	Tightening torque (N･m)	Recommended tightening method
(1) PT®	EJOT	K25×8	0.55 ± 0.055	by handwork (equivalent to 30 rpm by mechanical screw driver) ~ 600 rpm (by mechanical screw driver)
(2) PT®		K25×10	0.75 ± 0.075 N･m	
(3) DELTA PT®		25×8	0.55 ± 0.055 N･m	
(4) DELTA PT®		25×10	0.75 ± 0.075 N･m	
(5) B1 tapping screw	-	φ2.6×10	0.75 ± 0.075 N･m	
		φ2.6×12		

RECOMMENDED OPERATING CONDITIONS

Symbol	Item	Conditions	Limits			Unit
			Min.	Typ.	Max.	
V_{CC}	(DC) Supply voltage	Applied across C1-E2 terminals	-	600	850	V
V_{GEon}	Gate (-emitter drive) voltage	Applied across G1-E1s/G2-E2s terminals	13.5	15.0	16.5	V
R_G	External gate resistance	Per switch	1.0	-	6.8	Ω

CHIP LOCATION (Top view)

Dimension in mm, tolerance: ±1 mm

DX

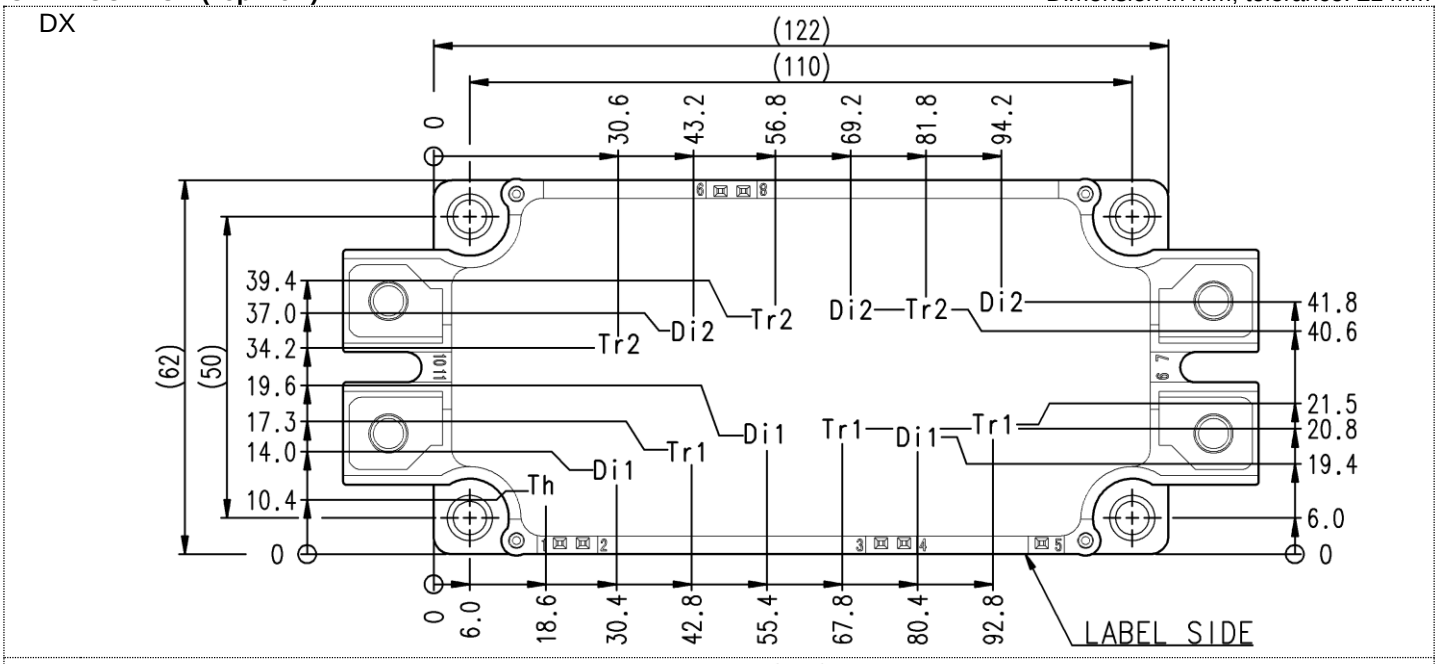

DXP

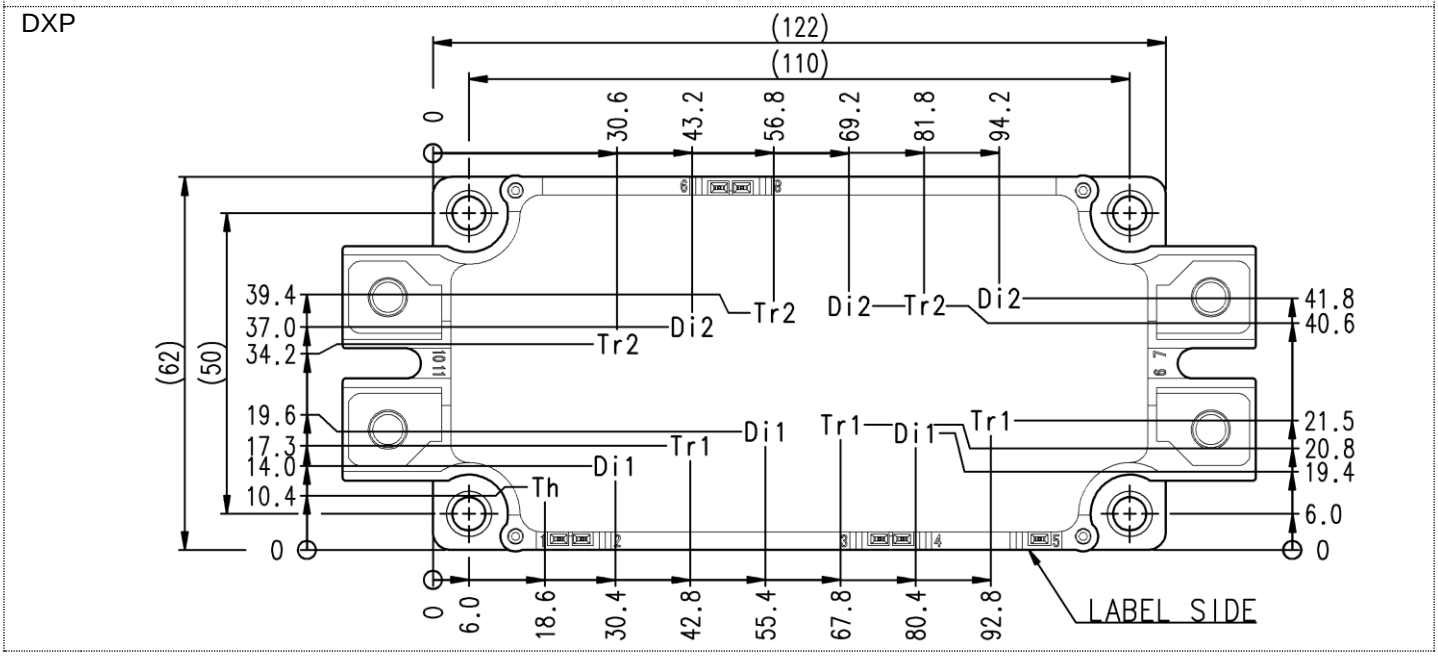

Tr1/Tr2: IGBT, Di1/Di2: FWD, Th: NTC thermistor

Option: PC-TIM applied baseplate outline

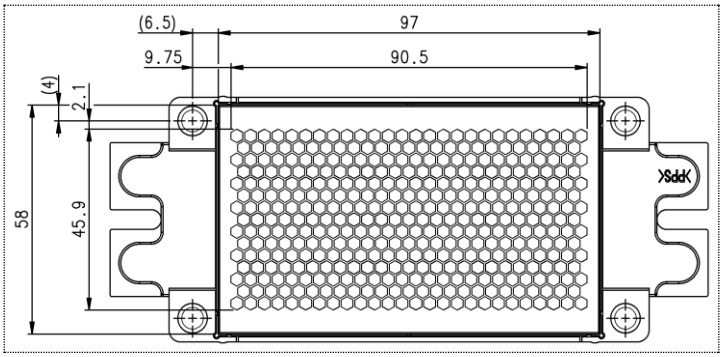

TEST CIRCUIT AND WAVEFORMS

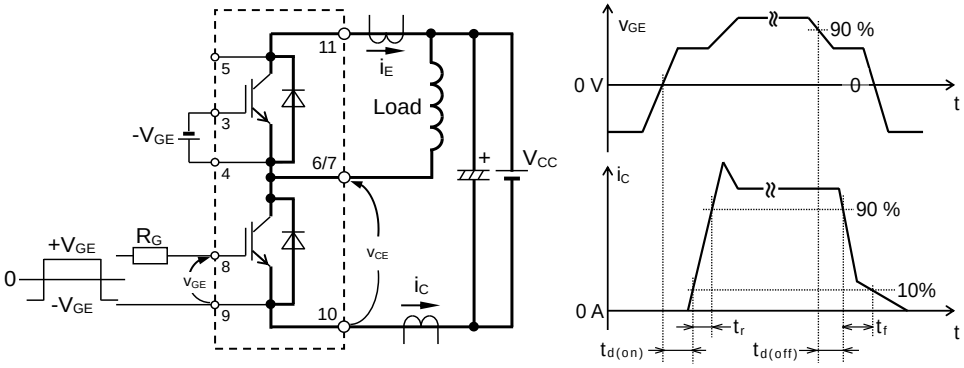

Switching characteristics test circuit and waveforms

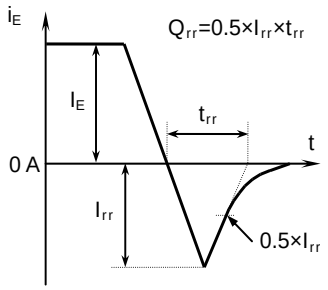

t_{rr}, Q_{rr} characteristics test waveform

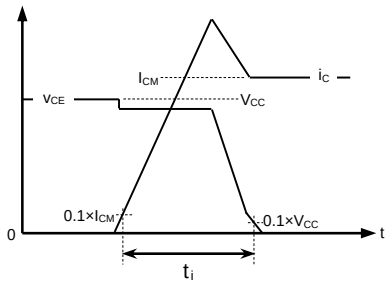

IGBT Turn-on switching energy

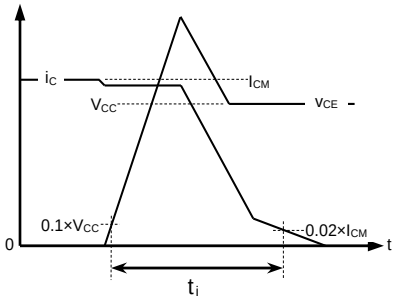

IGBT Turn-off switching energy

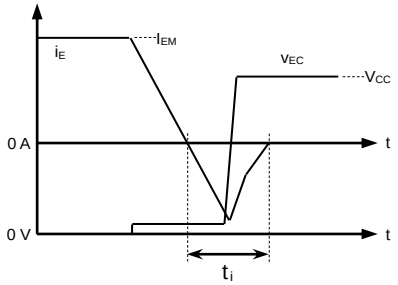

FWD Reverse recovery energy

Switching energy and Reverse recovery energy test waveforms (Integral time instruction drawing)

TEST CIRCUIT

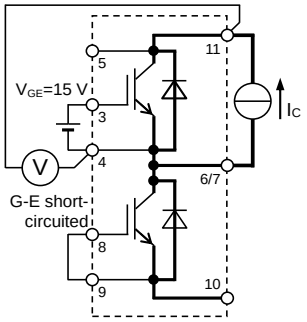

Tr1

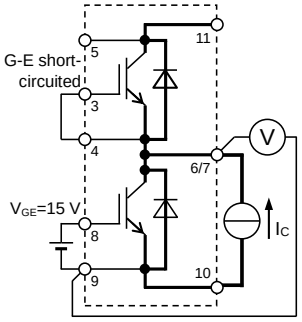

Tr2

V_{CEsat} characteristics test circuit

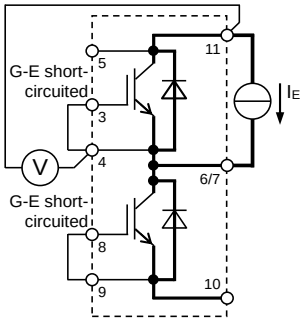

Di1

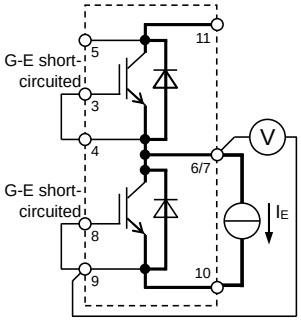

Di2

V_{EC} characteristics test circuit

PERFORMANCE CURVES

INVERTER PART

OUTPUT CHARACTERISTICS

(TYPICAL)

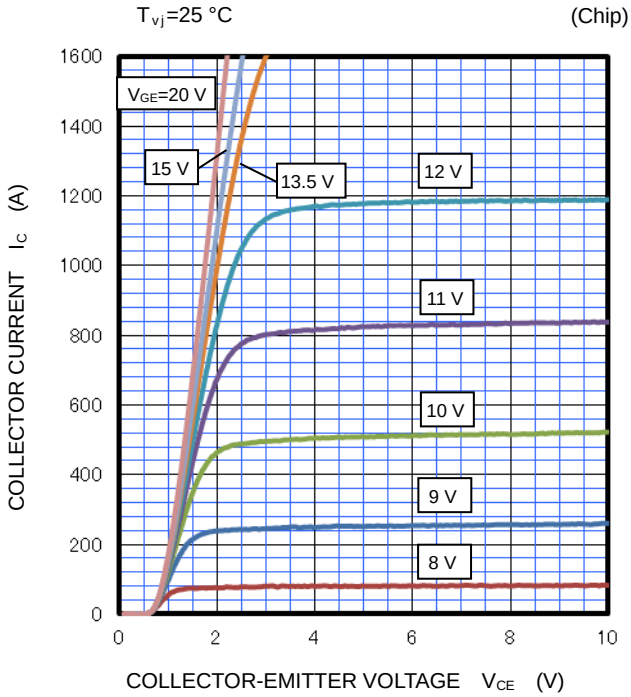

COLLECTOR-EMITTER SATURATION VOLTAGE CHARACTERISTICS
(TYPICAL)

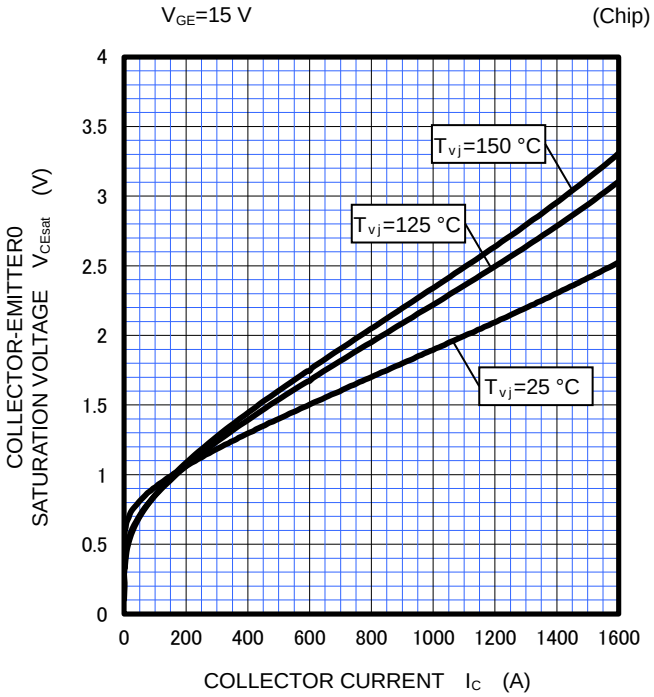

COLLECTOR-EMITTER SATURATION VOLTAGE CHARACTERISTICS
(TYPICAL)

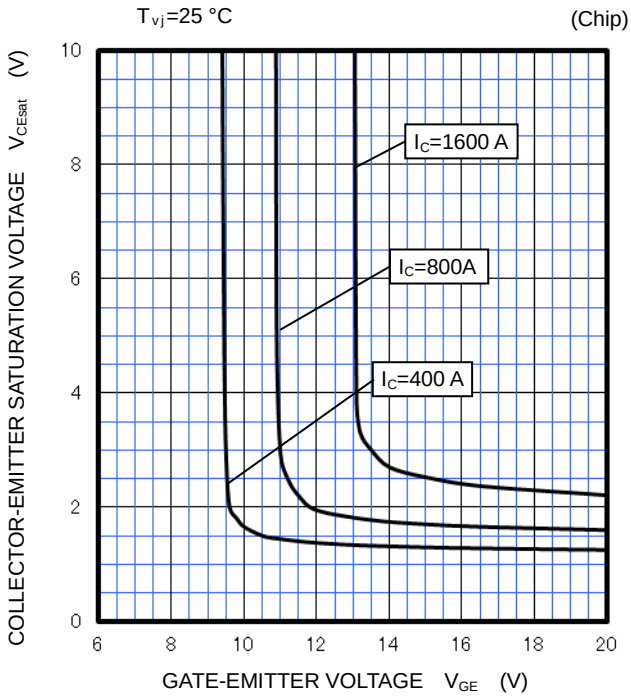

FREE WHEELING DIODE FORWARD CHARACTERISTICS
(TYPICAL)

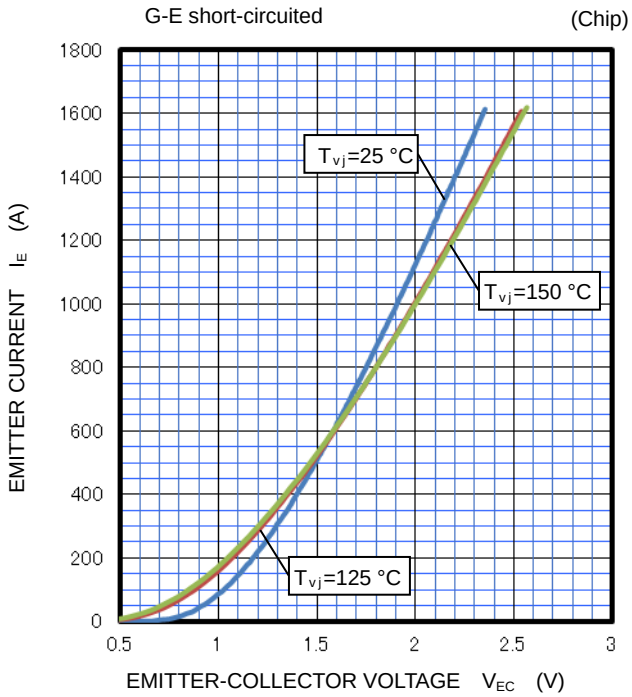

PERFORMANCE CURVES

INVERTER PART

HALF-BRIDGE SWITCHING CHARACTERISTICS (TYPICAL)

V_{CC}=600 V, V_{GE}=±15 V, R_G=1.0 Ω, INDUCTIVE LOAD
———: T_{vj}=150 °C, - - - - -: T_{vj}=125 °C

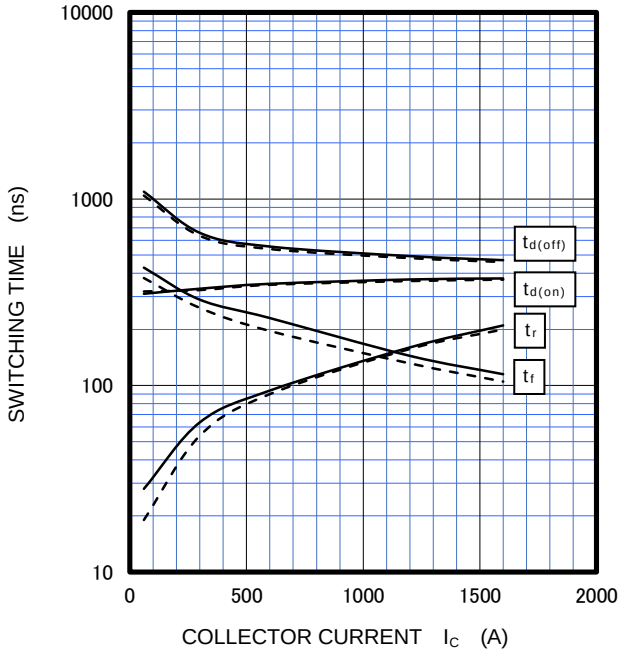

HALF-BRIDGE SWITCHING CHARACTERISTICS (TYPICAL)

V_{CC}=600 V, V_{GE}=±15 V, I_C=800 A, INDUCTIVE LOAD
———: T_{vj}=150 °C, - - - - -: T_{vj}=125 °C

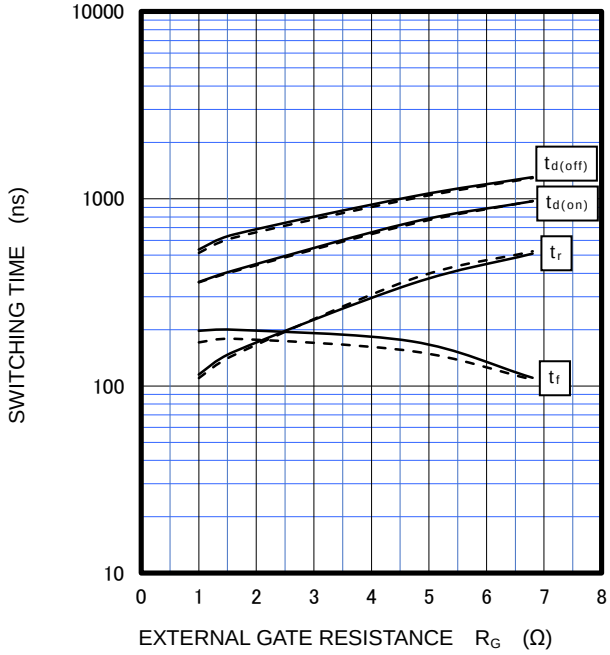

HALF-BRIDGE SWITCHING CHARACTERISTICS (TYPICAL)

V_{CC}=600 V, V_{GE}=±15 V, R_G=1.0 Ω,
INDUCTIVE LOAD, PER PULSE
———: T_{vj}=150 °C, - - - - -: T_{vj}=125 °C

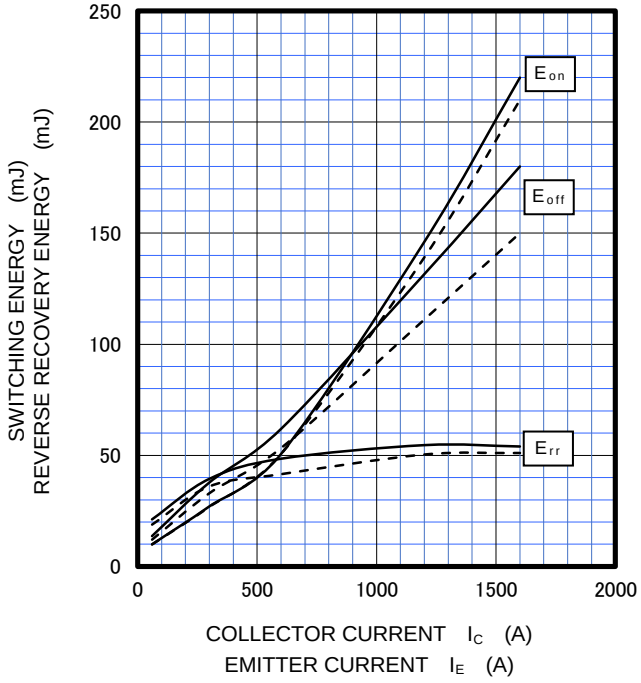

HALF-BRIDGE SWITCHING CHARACTERISTICS (TYPICAL)

V_{CC}=600 V, V_{GE}=±15 V, I_C/I_E=800 A,
INDUCTIVE LOAD, PER PULSE
———: T_{vj}=150 °C, - - - - -: T_{vj}=125 °C

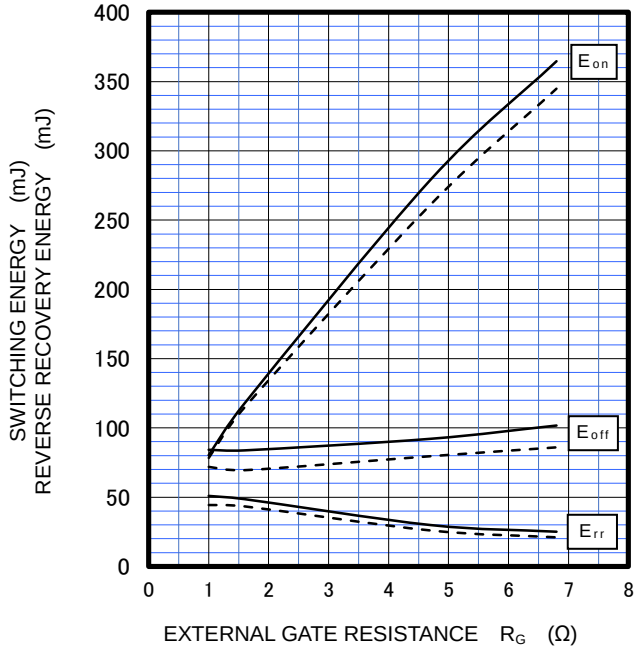

PERFORMANCE CURVES

INVERTER PART

CAPACITANCE CHARACTERISTICS

(TYPICAL)

G-E short-circuited, T_{vj}=25 °C

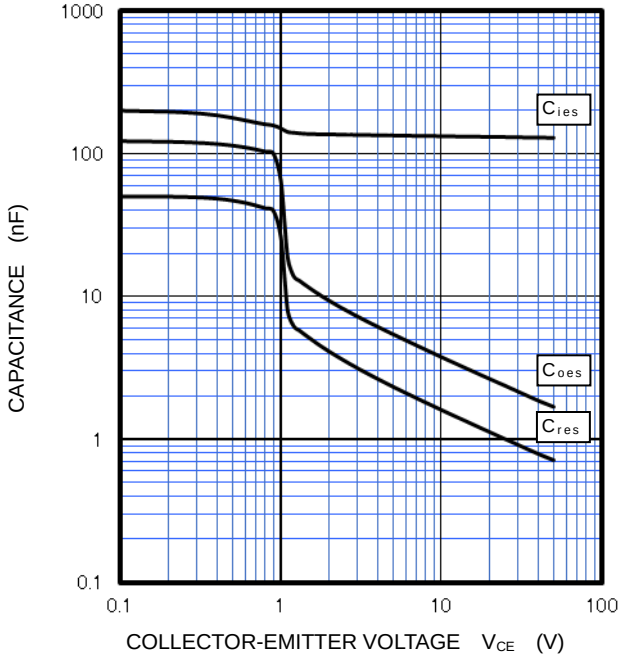

FREE WHEELING DIODE
REVERSE RECOVERY CHARACTERISTICS
(TYPICAL)

V_{CC}=600 V, V_{GE}=±15 V, R_G=1.0 Ω, INDUCTIVE LOAD
———: T_{vj}=150 °C, - - - - -: T_{vj}=125 °C

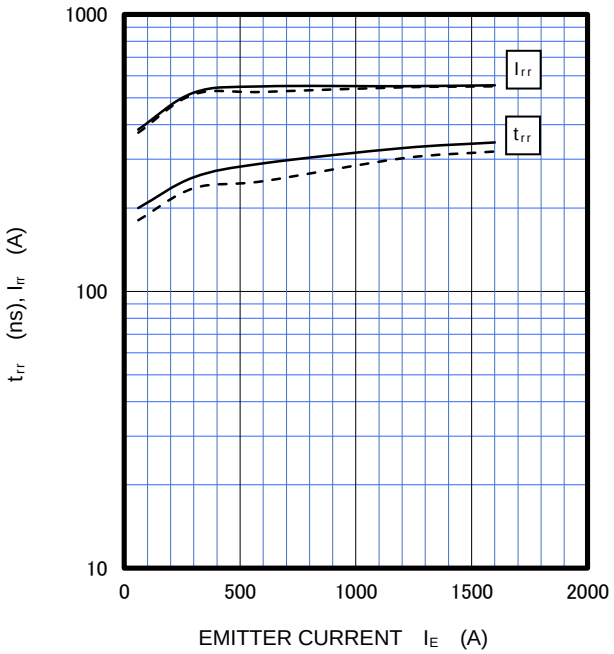

GATE CHARGE CHARACTERISTICS
(TYPICAL)

V_{CC}=600 V, I_C=800 A, T_{vj}=25 °C

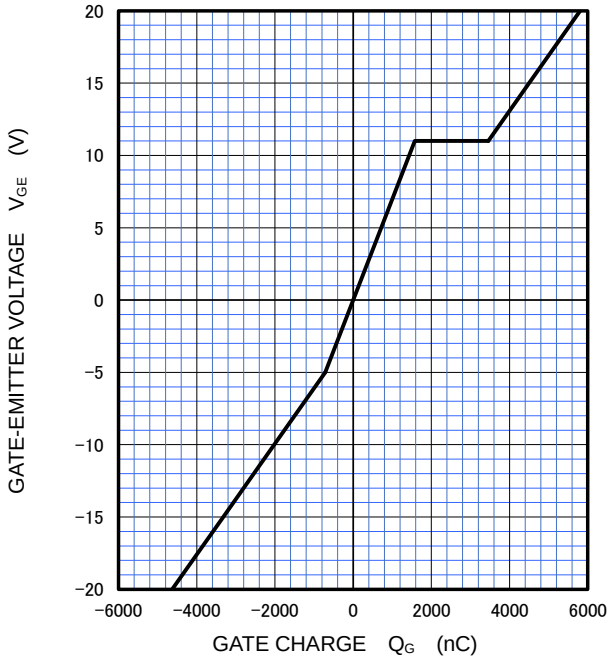

TRANSIENT THERMAL IMPEDANCE CHARACTERISTICS
(MAXIMUM)

Single pulse, T_C=25 °C
$R_{th(j-c)Q}$=43 K/kW, $R_{th(j-c)D}$=60 K/kW

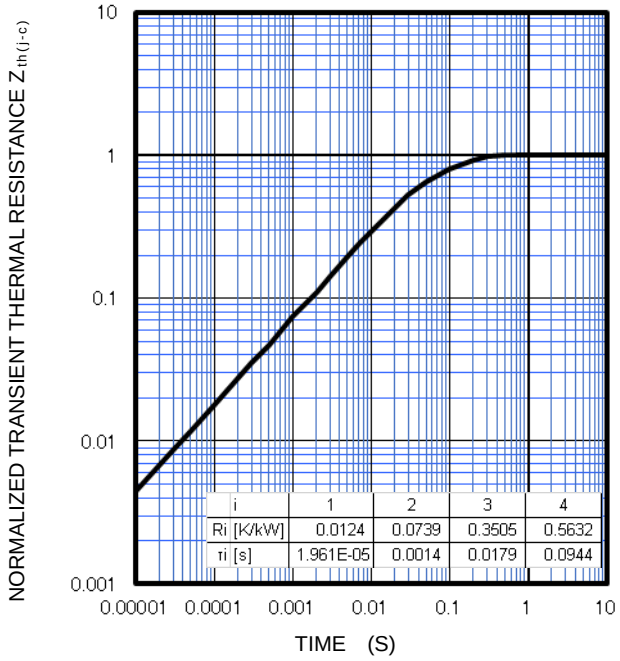

i	1	2	3	4
Ri [K/kW]	0.0124	0.0739	0.3505	0.5632
τi [s]	1.961E-05	0.0014	0.0179	0.0944

PERFORMANCE CURVES

INVERTER PART

TURN-OFF SWITCHING SAFE OPERATING AREA (REVERSE BIAS SAFE OPERATING AREA) (MAXIMUM)

V_{CC}≤850 V, R_G=1.0~6.8 Ω, V_{GE}=±15 V,
———: T_{vj}=25~150 °C (Normal load operations (Continuous)
- - - - - -: T_{vj}=175 °C (Unusual load operations (Limited period)

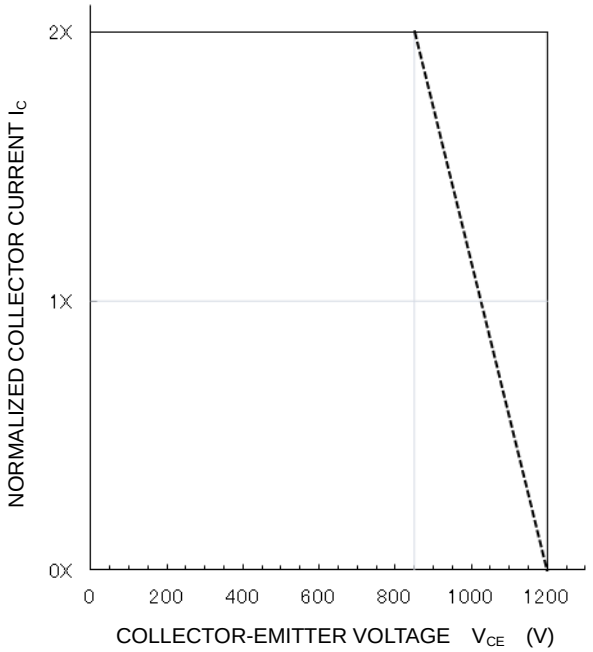

SHORT-CIRCUIT SAFE OPERATING AREA (MAXIMUM)

V_{CC}≤800 V, R_G=1.0~6.8 Ω, V_{GE}=±15 V,
T_{vj}= 25 ~ 150 °C, t_W≤8 μs, Non-Repetitive

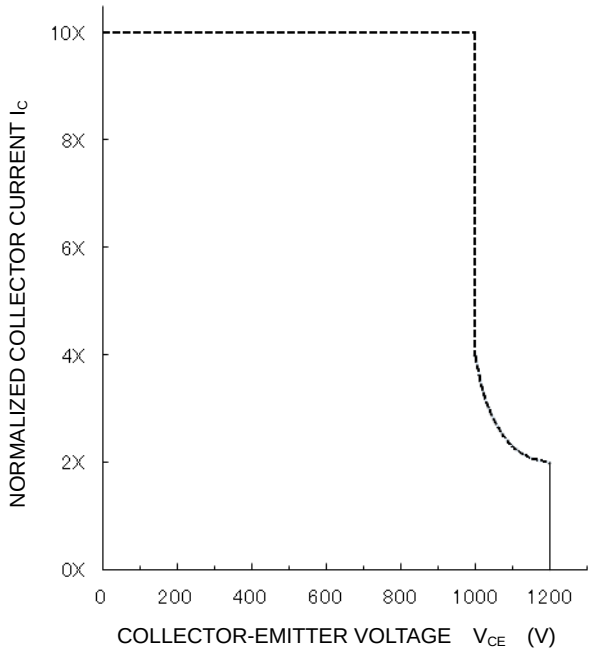

NTC thermistor part

TEMPERATURE CHARACTERISTICS (TYPICAL)

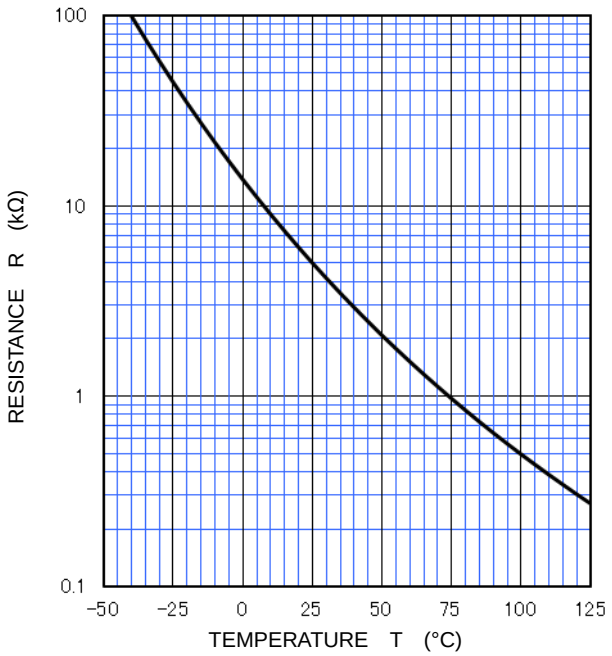

Note: The characteristics curves are presented for reference only and not guaranteed by production test, unless otherwise noted.

Keep safety first in your circuit designs!

This product is designed for industrial application purpose. The performance, the quality and support level of the product is guaranteed by “Customer's Std. Spec.”.
Mitsubishi Electric Corporation puts its reasonable effort into making semiconductor products better and more reliable, but there is always the possibility that trouble may occur with them by the reliability lifetime such as Power Cycle, Thermal Cycle or others, or to be used under special circumstances(e.g. high humidity, dusty, salty, highlands, environment with lots of organic matter / corrosive gas / explosive gas, or situation which terminal of semiconductor products is received strong mechanical stress).
In the customer's research and development, please evaluate it not only with a single semiconductor product but also in the entire system, and judge whether it's applicable. Furthermore, trouble with semiconductors may lead to personal injury, fire or property damage. Remember to give due consideration to safety when making your circuit designs, with appropriate measures such as (i) placement of substitutive, auxiliary circuits (e.g. appropriate fuse or circuit breaker between a power supply and semiconductor products), (ii) use of non-flammable material or (iii) prevention against any malfunction or mishap.

Notes regarding these materials

- These materials are intended as a reference to assist our customers in the selection of the Mitsubishi semiconductor product best suited to the customer's application; they do not convey any license under any intellectual property rights, or any other rights, belonging to Mitsubishi Electric Corporation or a third party.
- Mitsubishi Electric Corporation assumes no responsibility for any damage, or infringement of any third-party's rights, originating in the use of any product data, diagrams, charts, or circuit application examples contained in these materials.
- All information contained in these materials, including product data, diagrams and charts represents information on products at the time of publication of these materials, and are subject to change by Mitsubishi Electric Corporation without notice due to product improvements or other reasons. It is therefore recommended that customers contact Mitsubishi Electric Corporation or an authorized Mitsubishi Semiconductor product distributor for the latest product information before purchasing a product listed herein.
  The information described here may contain technical inaccuracies or typographical errors. Mitsubishi Electric Corporation assumes no responsibility for any damage, liability, or other loss rising from these inaccuracies or errors.
  Please also pay attention to information published by Mitsubishi Electric Corporation by various means, including the Mitsubishi Semiconductor home page (www.MitsubishiElectric.com/semiconductors/).
- When using any or all of the information contained in these materials, including product data, diagrams, and charts, please be sure to evaluate all information as a total system before making a final decision on the applicability of the information and products. Mitsubishi Electric Corporation assumes no responsibility for any damage, liability or other loss resulting from the information contained herein.
- Mitsubishi Electric Corporation semiconductors are not designed or manufactured for use in a device or system that is used under circumstances in which human life is potentially at stake. Therefore, this product should not be used in such applications.
  Please contact Mitsubishi Electric Corporation or an authorized Mitsubishi Semiconductor product distributor when considering the use of a product contained herein for any specific purposes, such as apparatus or systems for transportation, vehicular, medical, aerospace, nuclear, or undersea repeater use.
- In the case of new requirement is available, this material will be revised upon consultation.
- The prior written approval of Mitsubishi Electric Corporation is necessary to reprint or reproduce in whole or in part these materials.
- If these products or technologies are subject to the Japanese export control restrictions, they must be exported under a license from the Japanese government and cannot be imported into a country other than the approved destination.
  Any diversion or re-export contrary to the export control laws and regulations of Japan and/or the country of destination is prohibited.
- Please contact Mitsubishi Electric Corporation or an authorized Mitsubishi Semiconductor product distributor for further details on these materials or the products contained therein.